Work Order ID 60289

July 1, 2010 11:30:17 AM

Item ID: D2230-1 **Accept** **Setup Start** **Stop**

Revision ID:

Item Name: Lug

Start Date: 01/07/2010 **Start Qty:** 160.00 **Cust Item ID:**

Required Date: 22/07/2010 **Req'd Qty:** 160.00 **Customer:**

Reference: 10.07.01.

Run Start **Stop**

Approvals: **Process Plan:** _____ **Date:** _____ **Tooling:** _____ **Date:** _____

QC: _____ **Date:** _____ **SPC (Y/N):** _____ **Date:** _____

Sequence ID/ Work Center ID	Operation Description	Set Up/ Run Hours	Tool ID	Tool #	Plan Code	Accept Qty	Reject Qty	Reject Number	Insp. Stamp
Draw Nbr / **Revision Nbr**									
D2230 / Rev F									
100	BAND SAW	0.00				160	Ø		
Bandsaw		0.00							
Jeaspa Bandsaw	**Memo** Cut D2423 extrusion to 0.82" Batch: 45800								
110	HAAS CNC VERTICAL MACHINING #1	0.00				160	Ø		
HAAS 1		0.00							
HAAS CNC vertical machine #1	**Memo** 1-Machine per folio FA927 DWG REV: G FOLIO REV: AA (Check for crack while loading into the machine.) 2- deburr rough edges								

10/07/06 / 10/07/13

Work Order ID 60289

July 1, 2010 11:30:17 AM

Item ID: D2230-1 **Accept** **Setup Start**

Revision ID: **Stop**

Item Name: Lug

Start Date: 01/07/2010 **Start Qty:** 160.00 **Cust Item ID:**

Required Date: 22/07/2010 **Req'd Qty:** 160.00 **Customer:**

Reference:

Approvals: **Process Plan:** _____ **Date:** _____ **Tooling:** _____ **Date:** _____ **Run Start**

QC: _____ **Date:** _____ **SPC (Y/N):** _____ **Date:** _____ **Stop**

Sequence ID/ Work Center ID	Operation Description	Set Up/ Run Hours	Tool ID	Tool #	Plan Code	Accept Qty	Reject Qty	Reject Number	Insp. Stamp
120	QC2- Inspect parts off machine FAI/FAIB	0.00	DJP 10/07/06 / MWF 10/07/13			160	Ø		
QC	Memo	0.00							
Quality Control									
130	QC8- Inspect parts - second check	0.00	ark 10/07/13			160	Ø		
QC	Memo	0.00							
Quality Control									
140	Chemical Conversion Coat per QSI005 4.1	0.00							
HandFinish	Memo	0.00				160	RR 10-7-14.		
Hand Finishing									

Work Order ID 60289

July 1, 2010 11:30:17 AM

Item ID: D2230-1 **Accept** **Setup Start**

Revision ID: **Stop**

Item Name: Lug

Start Date: 01/07/2010 **Start Qty:** 160.00 **Cust Item ID:**

Required Date: 22/07/2010 **Req'd Qty:** 160.00 **Customer:**

Reference:

Approvals: **Process Plan:** _____ **Date:** _____ **Tooling:** _____ **Date:** _____ **Run Start**

QC: _____ **Date:** _____ **SPC (Y/N):** _____ **Date:** _____ **Stop**

Sequence ID/ Work Center ID	Operation Description	Set Up/ Run Hours	Tool ID	Tool #	Plan Code	Accept Qty	Reject Qty	Reject Number	Insp. Stamp
150	QC3- Inspect Part Finish	0.00	MS 10/07/K1			160	0		
QC	Memo	0.00							
Quality Control									
160	White Gloss(Ref:4.3.5.1) per QSI005 4.3-Alum	0.00							
Powdercoat	MM4841								
Powder Coating	Memo START TIME: 8:00 OVEN TEMPERATURE: 300° FINISH TIME: 8:30	0.00				160. BR 10-19-19			
170	QC3- Inspect Part Finish	0.00							
QC	Memo	0.00	MS 10/07/19			160			
Quality Control									

Work Order ID 60289

July 1, 2010 11:30:17 AM

Item ID: D2230-1
Revision ID:
Item Name: Lug
Start Date: 01/07/2010 **Start Qty:** 160.00
Required Date: 22/07/2010 **Req'd Qty:** 160.00
Reference:

Accept

Setup **Start**
Stop

Cust Item ID:
Customer:

Run **Start**
Stop

Approvals: **Process Plan:** _____ **Date:** _____ **Tooling:** _____ **Date:** _____
QC: _____ **Date:** _____ **SPC (Y/N):** _____ **Date:** _____

Sequence ID/ Work Center ID	Operation Description	Set Up/ Run Hours	Tool ID	Tool #	Plan Code	Accept Qty	Reject Qty	Reject Number	Insp. Stamp
180	Identify as per dwg & Stock Location: St 476	0.00							
Packaging									
Packaging	**Memo**	0.00				160			
190	QC21- Final Inspection - Work Order Release	0.00							
QC									
Quality Control	**Memo**	0.00							

St 10/07/22

10/07/23

MF
10-7-22

Picklist Print

July 1, 2010 11:30:17 AM

Work Order ID: 60289

Parent Item: D2230-1

Parent Item Name: Lug

Start Date: 01/07/2010 **Required Date:** 22/07/2010

Start Qty: 160.00 **Required Qty:** 160.00

Comments: IPP □D□00.11.01□Added inspection level 8, and removed P/O for powder coat□EC□

Component Item ID/ Item Name	Replacement Item ID	Mfg/ Purch	Bin Item	Primary Location	Last Location	Route Seq ID	Unit of Measure	Qty on Hand	Qty per Kit	Total Qty	Qty Issued	Date Issued	Status
D2423 Lug Extrusion		Manufactured	No			110	f	425.4002	0.0683	11.50316			

Location	Loc Qty	Loc Code
MAT06	425.4001895	
43722	180	
45800	245.400189	

11.50316 DJP 10/07/06

DART AEROSPACE LTD	Work Order:	60289
Description: Mounting Lug	Part Number:	D2230-1
Inspection Dwg: D2230 **Rev:** F		Page 1 of 1

FIRST ARTICLE INSPECTION CHECKLIST

[X] First Article [ ] Prototype

Drawing Dimension	Tolerance	Actual Dimension	Accept	Reject	Method of Inspection	Comments
4.450	+/-0.010	4.45	✓			
0.306	+/-0.010	0.303	✓			
0.345	+/-0.010	0.338	✓			
0.400	+/-0.010	0.398	✓			
0.250	+/-0.010	0.251	✓			
3.700	+/-0.010	3.700	✓			
0.750	+/-0.010	0.749	✓			
Ø0.257	+0.005/-0.000	0.258	✓			
1.91	+/-0.010	1.914	✓			
R1.200	+/-0.010	1.200	✓			
0.375	+/-0.010	0.375	✓			
0.273	±0.010	0.278	✓			

Measured by:	[signature]	Audited by:	[signature]	Prototype Approval:	N/A
Date:	10/07/06	Date:	10/07/13	Date:	

Rev	Date	Change	Revised by	Approved
A	03.11.11	New Issue	KJ/RF [signature]	[signature]

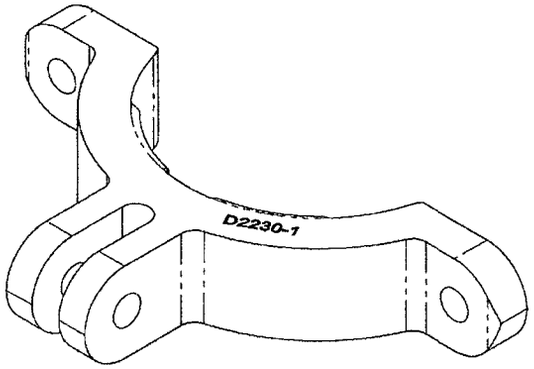

D2230-1 MOUNTING LUG

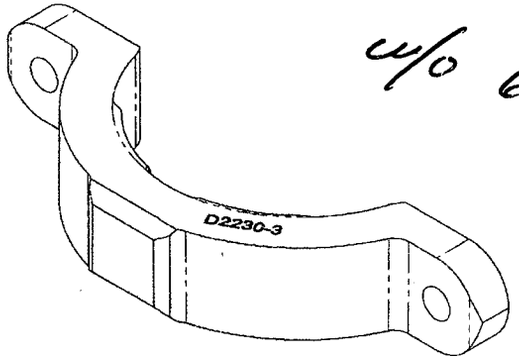

w/o 60289

D2230-3 MOUNTING LUG

RELEASED 09/06/25 NM

REV.	DESCRIPTION	BY	DATE
G	REDRAWN IN SOLIDWORKS TO CURRENT DESIGN STANDARDS. REFER TO SECTION A-A & B-B FILLET ADDED TO PREVENT CHAFING OF RUBBER CUSHION ON INSTALLATION.	AJS	09.01 16
F	REDESIGN; R1.200 WAS 1.100	CP	99.12.13
E	RE-DESIGN	BW	95.01.04
D	RE-DESIGN	BW	95.01.04
C	RE-DESIGN	BW	94.03.30

G

NOTES:
1) MATERIAL: MAKE FROM D2423 EXTRUSION
2) FINISH: CHEMICAL CONVERSION COAT PER DART QSI 005 4.1
POWDER COAT WHITE (4.3.5.1) PER DART QSI 005 4.3
3) TOLERANCES: PER DART QSI 018 UNLESS OTHERWISE NOTED
4) UNITS: INCHES UNLESS OTHERWISE NOTED
5) BREAK SHARP EDGES: 0.005 TO 0.010 MAX
6) IDENTIFICATION: ENGRAVE PART NUMBER TO A DEPTH OF 0.010±0.005 IN THIS LOCATION, WITH TOOL TIP RADIUS OF 0.015±0.005.
7) WEIGHT: -1: 0.16 lbs
-3: 0.14 lbs

DESIGN	BW	**DART AEROSPACE LTD** HAWKESBURY, ONTARIO, CANADA
DRAWN	AJS	
CHECKED		DRAWING NO. D2230 — REV. G — SHEET 1 OF 3
MFG. APPR.		
APPROVED		TITLE: MOUNTING LUG — SCALE: NTS
DE APPR.		
DATE	09.01.16	

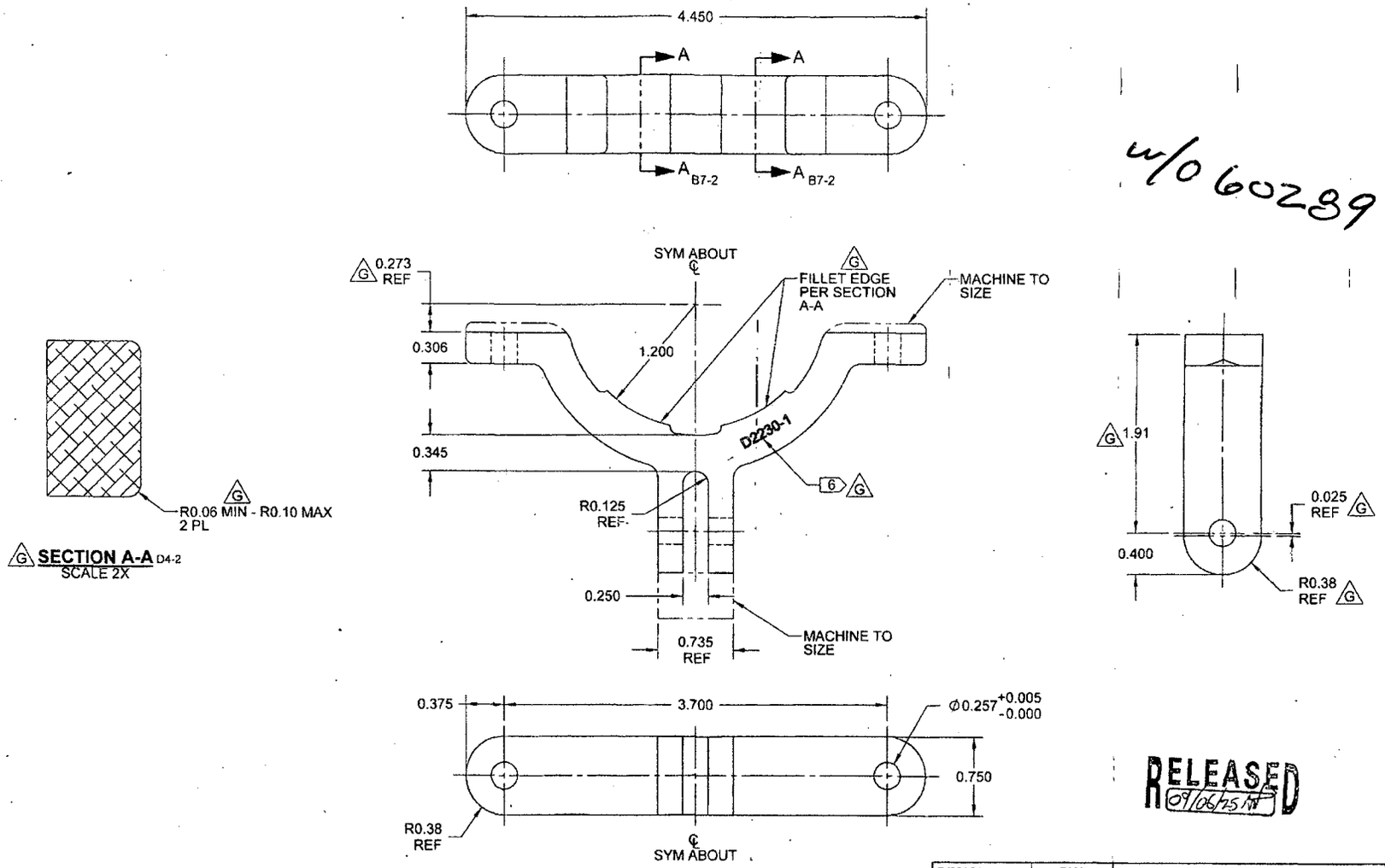

w/o 60289

RELEASED 09/06/25

D2230-1 MOUNTING LUG

DESIGN	BW	**DART AEROSPACE LTD** HAWKESBURY, ONTARIO, CANADA
DRAWN	AJS	DRAWING NO. D2230 — REV. G — SHEET 2 OF 3
CHECKED		
MFG. APPR.		
APPROVED		TITLE: MOUNTING LUG — SCALE: NTS
DE APPR.		
DATE	09.01.16	

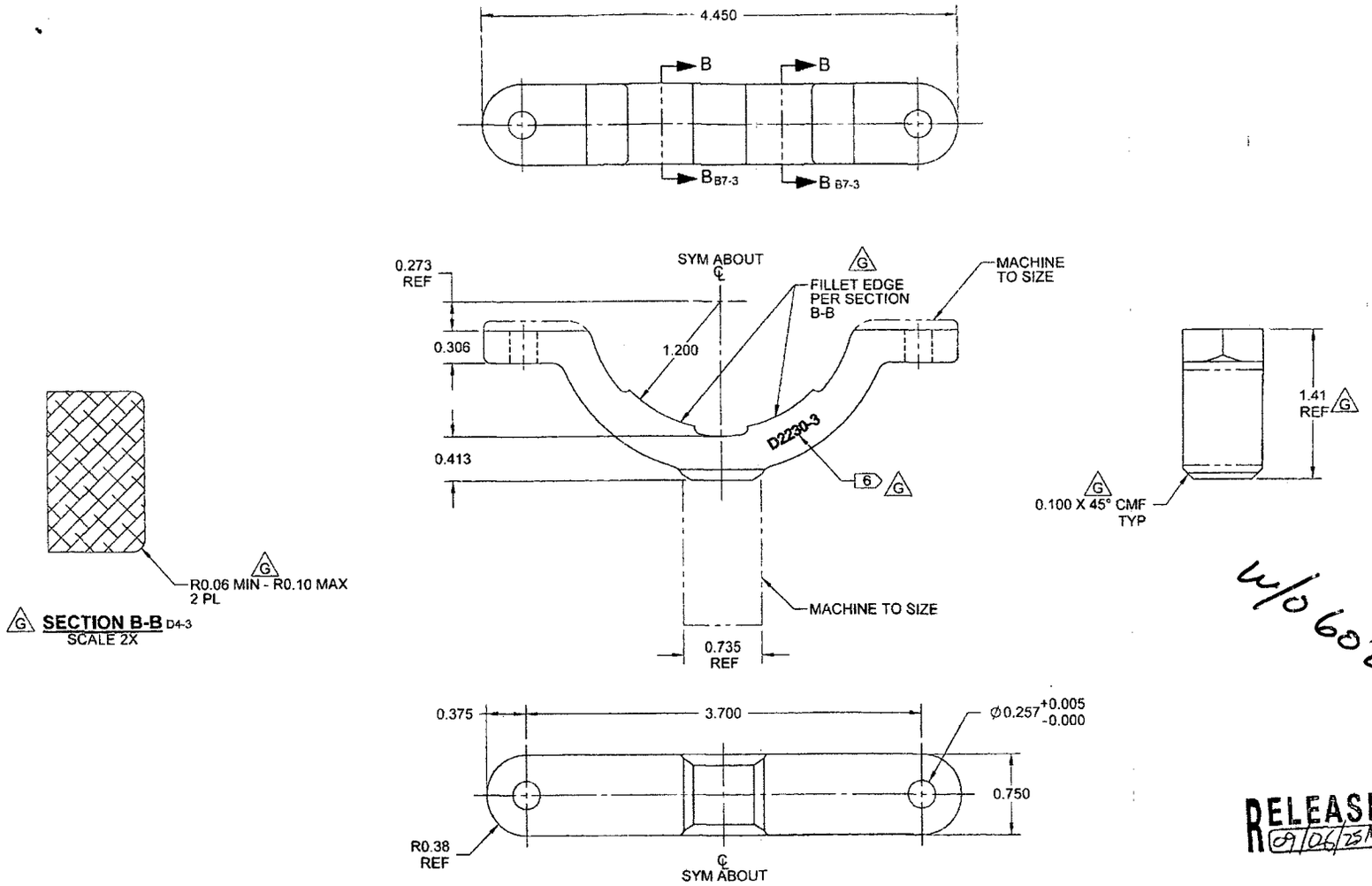

w/o 60289

RELEASED 09/06/25

D2230-3 MOUNTING LUG

DESIGN	BW	**DART AEROSPACE LTD** HAWKESBURY, ONTARIO, CANADA
DRAWN	AJS	
CHECKED		DRAWING NO. D2230 — REV. G — SHEET 3 OF 3
MFG. APPR.		
APPROVED		TITLE: MOUNTING LUG — SCALE: NTS
DE APPR.		
DATE	09.01.16	